M/K. NO. –

PART NO SYM	PART NAME	MAT'L	DIMENSIONS	Q'TY PER SET	WEIGHT (kg)	REMARKS
63	AIR BREATHER	PURCH	PT 1/2"	1		
64	PLUG	PURCH	PT 1/2"	4		

PART NO SYM	PART NAME	MAT'L	DIMENSIONS	Q'TY PER SET	WEIGHT (kg)	REMARKS
56	SPRING PIN	PURCH	ø13*60L	8		
57	SPRING PIN	PURCH	ø10*40L	8		
58	TAPER PIN	S45C	ø10*30L	2		
59	WRENCH BOLT	SCM435	M8*25L	20		
60	WRENCH BOLT	SCM435	M12*40L	8		
61	PARALLEL PIN	S45C	ø13*40L	4		
62	HEX. BOLT, S/W	10.9	M8*20L	6		

PART NO SYM	PART NAME	MAT'L	DIMENSIONS	Q'TY PER SET	WEIGHT (kg)	REMARKS
46	SNAP RING	PURCH	H-ø60	3		
47	SNAP RING	PURCH	H-ø125	1		
48	SNAP RING	PURCH	S-ø80	1		
49	SNAP RING	PURCH	S-ø40	1		
50	WRENCH BOLT	SCM435	M16*135L	4		
51	WRENCH BOLT	SCM435	M12*80L	3		
52	WRENCH BOLT	SCM435	M12*150L	16		
53	STUD BOLT,NUT,S/W	S45C	M12*105L	12		
54	STUD BOLT,2NUT,S/W	S45C	M12*255L	4		
55	HEX. BOLT,NUT,S/W	10.9	M10*45L	8		

PART NO SYM	PART NAME	MAT'L	DIMENSIONS	Q'TY PER SET	WEIGHT (kg)	REMARKS
1	1ST SUN GEAR	SCM415		1		
2	1ST PLANETARY GEAR	SCM415		4		
3	1ST INTERNAL GEAR	SCM440		1		
4	2ND SUN GEAR	SCM415		1		
5	2ND PLANETARY GEAR	SCM415		3		
6	2ND INTERNAL GEAR	SCM440		1		
7	3RD PINION GEAR	SCM415		1		
8	3RD PINION SHAFT	SCM415		1		
9	1ST CARRIER	SCM440		1		
10	2ND CARRIER	SCM440		1		
11	1ST PIN	SCM415		4		
12	2ND PIN	SCM415		3		
13	3RD SHAFT	SCM440		1		
14	PLATE	BC		8		
15	PLATE	BC		6		
16	COLLAR	S45C		4		
17	COLLAR	S45C		3		
18	COLLAR	S45C		1		
19	COLLAR	S45C		1		
20	BUSH	S45C		1		
21	FLANGE	SCM440		1		
22	HOUSING-A	S45C		1		
23	HOUSING-B	S45C		1		
24	CASE	SS400		1		
25	BEARING COVER	SS400		1		
26	BEARING COVER	SS400		1		
27	BEARING COVER	SS400		1		
28	INSPECTION COEVR	SS400		1		
29	BEARING	PURCH	NCF2940 CV	1		SKF
30	BEARING	PURCH	SL182932	1		FAG
31	BEARING	PURCH	NA6912	8		SKF
32	BEARING	PURCH	32924	2		FAG
33	BEARING	PURCH	NA4911	6		SKF
34	BEARING	PURCH	NU1016-M1.C3	1		FAG
35	BEARING	PURCH	32015-X	2		FAG
36	BEARING	PURCH	NJ208-E-TVP2	1		FAG
37	BEARING	PURCH	N210-E-TVP2	1		FAG
38	BEARING	PURCH	6210	1		KBC
39	OIL SEAL	NBR	ø200*ø230*15	1		
40	OIL SEAL	NBR	ø45*ø68*12	1		
41	PARALLEL KEY	S45C	25*14*32L	1		
42	PARALLEL KEY	S45C	12*8*34L	1		
43	LOCK NUT, WS	S45C	AN, AW 15	1		
44	LOCK NUT, WS	S45C	AN, AW 10	1		
45	SNAP RING	PURCH	H-ø65	4		

SPECIFICATION OF REDUCER	
POWER RATING	35.25 kW
GEAR RATIO	72.269/1
INPUT SPEED	15.29 rpm
OUTPUT SPEED	1105 rpm

SPECIFICATION OF GEAR								
POSITION	1ST STAGE			2ND STAGE			3RD STAGE	
DESCRIPTION	SUN	PLANET	INTERNAL	SUN	PLANET	INTERNAL	PINION	GEAR
GEAR TYPE	SPUR			SPUR			SPUR	
MODULE	4			2.5			2.25	
PRESSURE ANGLE	20°			20°			20°	
NO. OF TEETH	25T	31T	87T	24T	42T	108T	88T	30T
OPERATING P.C.D	102.23	126.77	355.77	61.09	106.91	274.91	199.86	68.14
FACE WIDTH	97.5	92.5	92.5	55	50	50	55	60
HEAT TREATMENT/MATERIAL	CARBURIZING		HNT	CARBURIZING		HNT	CARBURIZING	
TOOTH HARDNESS (Hs)	75-80		75-80	75-80		75-80	75-80	
GRADE OF GEARS	JIS 2		JIS 3	JIS 2		JIS 3	JIS 2	
FINISHING	GINDING		SHAPING	GINDING		SHAPING	GRINDING	
* LUBRICATION SYSTEM : FORCED CIRCULATION SYSTEM								
* LUBRICANT : ISO VG 220								
* OIL QUANTITY : APPROX. LITER								
* TOTAL WEIGHT : APPROX. kg (WITH OIL WEIGHT)								

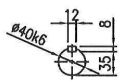

OUTPUT SHAFT

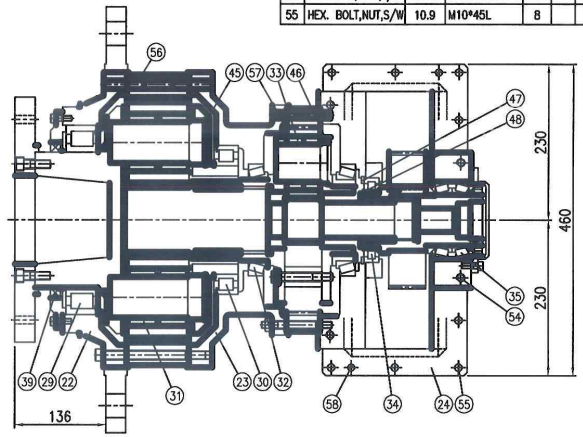

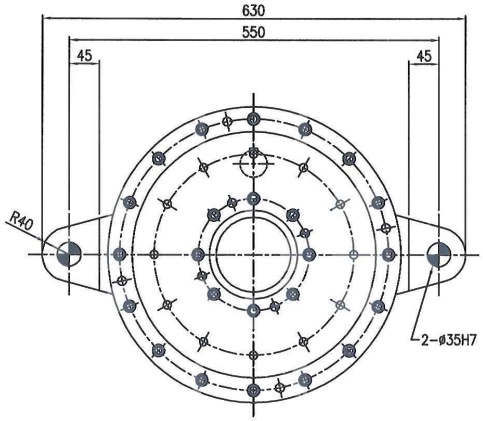

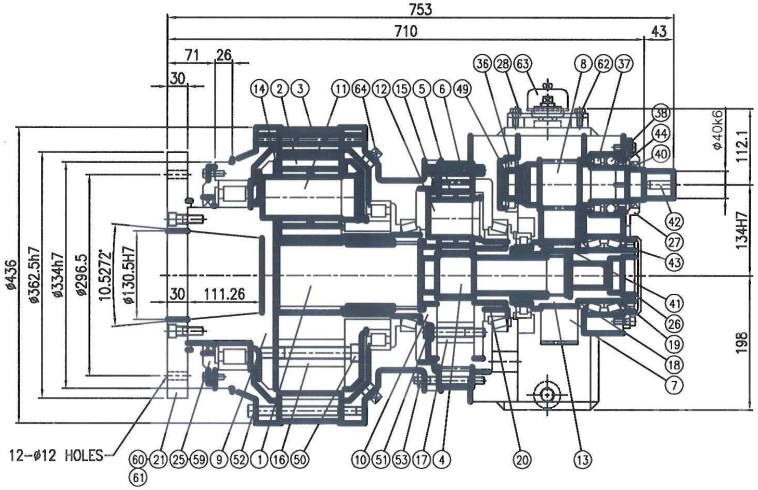

M'K	DATE	REASON FOR REVISION	DWN	CHK	APP
△					
△					

PROJECT

CUSTOMER –

SET

TITLE PLANETARY REDUCER ASSEMBLY

PROJECTION

SCALE (A3) 1/6

DRAWN BY | DESIGNED BY | CHECKED BY | APPROVED BY

REV.NO. △△△△△

DWG.NO. PL114-00

GENERAL TOLERANCE FOR MACHINING DIN 7168 PART 1. m	0.5~6	6~30	30~120	120~400	400~1000	1000~2000	2000~4000	4000~8000	8000~12000	12000~16000	16000~20000
	± 0.1	± 0.2	± 0.3	± 0.5	± 0.8	± 1.2	± 2	± 3	± 4	± 5	± 5

GENERAL TOLERANCE FOR LENGTH OF WELDED STRUCTURE DIN 8570 PART 1. B	2~30	30~120	120~400	400~1000	1000~2000	2000~4000	4000~8000	8000~12000	12000~16000	16000~20000	OVER 20000
	± 1	± 1	± 1	± 3	± 4	± 6	± 8	± 10	± 12	± 14	± 16